Istraživanja i projektovanja za privredu
ISSN 1451-4117
DOI:10.5937/jaes0-68470
www.engineeringscience.rs

iipp publishing

Journal of Applied Engineering Science
Review Paper,
Volume 24, Number 4, Year 2026,
no 1369, pp 763-780

CABIN VIBRATION CONTROL IN RAILWAY VEHICLES: A DECADE SCOPING REVIEW OF PRACTICAL DAMPING SOLUTIONS FOR PASSENGER COMFORT

Achmad Syaifudin[1]*, Galih Nanda Dewa[2], Meifal Rusli[3], Feblil Huda[4], Yani Kurniawan[5], Wiwiek Hendrowati[2], Wahyu Sulistiyo[6], Ridho Dwimansyah[7], Jean Mario Valentino[6]

[1]Institut Teknologi Sepuluh Nopember, Directorate of Research and Community Service, Center for Appropriate Technology, Surabaya, Indonesia
[2]Institut Teknologi Sepuluh Nopember, Faculty of Industrial Technology and Systems Engineering, Department of Mechanical Engineering, Surabaya, Indonesia
[3]Universitas Andalas, Faculty of Engineering, Mechanical Engineering Department, Padang, Indonesia
[4]Universitas Riau, Engineering Faculty, Mechanical Engineering Department, Pekanbaru, Indonesia
[5]Universitas Pancasila, Faculty of Engineering, Department of Mechanical Engineering, Jakarta, Indonesia
[6]National Research and Innovation Agency, Research Center for Transportation Technology, Jakarta, Indonesia
[7]National Research and Innovation Agency, Material Mechanics & Structure laboratory, Jakarta, Indonesia
**syaifudin@its.ac.id*

Background: Increasing train operating speeds while maintaining passenger ride comfort presents ongoing mechanical and dynamic isolation challenges.Objectives: This scoping review maps the development of railway carbody vibration control and damping technologies published over the past decade (2016–partial 2026) to classify technology distributions, validation rigors, and operational speed ranges. Eligibility Criteria & Sources: Peer-reviewed journal articles in English were systematically searched across the Scopus database using Population–Concept–Context (PCC) criteria. Charting Methods: Following PRISMA-ScR guidelines, retrieved full-text studies were screened independently by multiple reviewers on Rayyan, with non-unanimous blind decisions resolved through senior mediation. Extracted evidence was categorized across a five-group energy/control taxonomy and stratified into two engineering validation tiers. Results: Of 30 included primary studies, advanced passive systems dominate the published literature at 66.7% (n=20), followed by semi-active systems (16.7%, n=5), active systems (10.0%, n=3), smart air/fluid systems (3.3%, n=1), and hybrid active noise/vibration control (3.3%, n=1). Evidence stratification reveals that 40.0% (n=12) achieved Tier 1 validation (simulation with physical test-rig/field testing), while 60.0% (n=18) relied strictly on Tier 2 numerical simulations. Conclusions: Optimizing passive parameters remains the dominant research focus due to system simplicity and power independence. Future efforts should address retrofittable tertiary isolators to bridge passive limitations. Limitations: Findings are constrained by a single-database search, partial-year coverage for 2026, unretrieved paywalled reports (n = 76), single-study evidence in n=1 categories, missing speed data in benchmark literature, and the omission of formal risk-of-bias critical appraisal.

Keywords: PRISMA-ScR, carbody vibration isolation, ride comfort metrics, railway vehicle suspension, advanced passive systems, medium speed transport

HIGHLIGHTS

- Advanced passive systems constitute the largest share (66.7%, 20/30 studies) of the reviewed academic literature.
- Active and semi-active systems offer high performance but are limited by cost, complexity, and durability.
- Future research should focus on innovative mechanical designs and retrofit-ready tertiary suspension solutions for these vehicles.

1 Introduction

The continuous demand for faster railway transportation, especially in high-speed and intercity services, presents an ongoing challenge: maintaining passenger comfort while increasing operating speed. As trains run faster, the vibrations originating from the wheel–rail interaction propagate more aggressively through the suspension system and into the carbody. These vibrations become more complex, spanning both low- and high-frequency ranges, and are increasingly difficult to control. If not properly isolated, they can lead to noticeable carbody motion, such as swaying and structural flexing, which can contribute to passenger discomfort, fatigue, and even motion sickness [1, 2]. Therefore, improving vibration damping at the cabin level has remained an important focus in mechanical and railway engineering research over the past decade.

In practice, the effectiveness of these damping solutions cannot be evaluated solely based on mechanical performance indicators. Passenger perceptions must also be considered. Internationally, ride comfort is assessed using standards such as ISO 2631-1, which evaluates human exposure to vibrations in the vertical and lateral directions. In railway applications, this framework is complemented by EN 12299, which introduces specific

evaluation methods, including the Sperling index and the Continuous Comfort Index (NMV)[3]. Ultimately, the performance of a suspension system is judged by how well it limits the weighted acceleration and suppresses low-frequency oscillations within the acceptable comfort thresholds [4, 5].

To meet these requirements, railway suspension technologies have evolved into several distinct approaches over the years. Advanced passive systems, which serve as the foundation for many existing designs, are the most widely adopted. These systems include inerter-based mechanisms, nonlinear rubber components, and underfloor mass-tuning strategies. Their main advantages are their simplicity, reliability, and independence from external power sources [6–8].

To improve adaptability, researchers have explored smart air and fluid spring systems, which allow better control of stiffness and load distribution under varying operating conditions [9] . For more demanding scenarios, particularly at higher speeds or under rapidly changing track conditions, attention has shifted toward semi-active systems, such as magnetorheological (MR) dampers controlled by strategies such as the skyhook algorithm [9, 10]. These are further extended by fully active suspension systems, where actuators are used to suppress dynamic instabilities, including hunting motion, in real time [11, 12].

Recently, developments have moved beyond purely mechanical solutions toward integrated approaches, such as hybrid Active Noise and Vibration Control (ANVC). This method combines vibration suppression in the suspension system with acoustic control inside the cabin, often using piezoelectric actuators to simultaneously address both the structural vibrations and noise [13].

Despite the rapid growth of these technologies, the current body of research remains somewhat fragmented. Most studies tend to focus on individual solutions without clearly comparing their effectiveness or compliance with established comfort standards, such as ISO 2631-1 and EN 12299. Consequently, the literature spans diverse engineering domains—ranging from primary/secondary vehicle suspension design and carbody structural dynamics to interior acoustic control and running safety—making it difficult to assess how these heterogeneous studies map onto passenger ride comfort standards. To establish clear analytical boundaries, this study distinguishes between carbody vibration control (mechanical isolation applied to bogie-carbody interfaces), dynamic safety proxies (hunting stability and derailment coefficients), and human exposure metrics (frequency-weighted accelerations under ISO 2631-1 and EN 12299).

Therefore, a structured review is required. Using a systematic scoping review framework, this study systematically mapped the development of technological landscape, categorize evaluation metrics, evaluate retrofitting constraints, and identify key research gaps across operational speed ranges for future suspension designs. By retaining a practical engineering perspective, this review systematically synthesizes the accessible literature to map vibration control technologies against their suspension application points, operational speed contexts, validation levels (numerical simulation vs. experimental/field testing), and maintenance/power constraints. In doing so, it aims to transform general engineering claims into transparent findings directly traceable to extracted study data.

While existing literature surveys in railway engineering have evaluated active and semi-active suspension control strategies [14] or global vehicle-track dynamic coupling [15] , the literature remains fragmented regarding how carbody vibration control technologies systematically map onto passenger ride comfort standards (ISO 2631-1 / EN 12299) and operational retrofitting constraints. Specifically, prior surveys lack a structured PRISMA-ScR mapping protocol and do not differentiate empirical field/test-rig validations from numerical MBD/FEA simulations. To explicitly establish the state-of-the-art positioning and novel contributions of this study, Table 1 synthesizes these representative review papers against the present manuscript across key analytical dimensions.

Table 1. Comparative synthesis of state-of-the-art review papers in railway suspension control, dynamics, and ride comfort

Benchmark Paper	Main Focus & Scope	Methodological Coverage (Databases, Period, Count)	Analytical Boundaries & Limitations	Unique Contribution of Present Review (Our Study)
Fu et al. (2020) Rail. Eng. Sci.	Literature survey of active & semi-active secondary/primary suspension configurations, actuation concepts, and control algorithms.	Comprehensive narrative survey; Scopus / WoS / Google Scholar; 1980–2019 (~160 references).	Evaluates control strategies (Skyhook, LQG, H_∞, Fuzzy) for ride quality and steering; omits systematic PRISMA mapping and validation tiers.	Provides a systematic PRISMA-ScR scoping review mapping across 5 technology groups, stratifying evidence into Tier 1 (field/test-rig) vs Tier 2 (simulation) and mapping direct ISO 2631-1 / EN 12299 metrics.

Benchmark Paper	Main Focus & Scope	Methodological Coverage (Databases, Period, Count)	Analytical Boundaries & Limitations	Unique Contribution of Present Review (Our Study)
Li & Chen (2026) Sound & Vib.	Life-cycle dynamic coupling between track excitation, dynamic performance, and structural fatigue reliability.	Broad literature survey; Scopus / WoS; 2015–2025 (~ 95 studies).	Evaluates dynamic response and fatigue life; lacks explicit classification of vibration control by evidence tier or comfort standards.	Categorizes evidence validation tiers (Tier 1 vs Tier 2) and differentiates direct human vibration exposure indices from vehicle dynamic safety proxies.
Present Review (Our Manuscript)	Systematic scoping review of carbody vibration control technologies mapped against passenger comfort standards and retrofit constraints.	PRISMA-ScR framework and PCC framework (Population: passenger trains @120km/h; Concept: carbody vibration control; Context: ride comfort standards).	ISO 2631-1, EN 12299, Sperling Wz, RTRI L_T, GB/T 5599, and EN 14363 safety proxies.	Systematically bridges cabin comfort standards, evidence validation tiers (Tier 1 vs Tier 2), dynamic safety proxies, and practical retrofit feasibility for operational passenger railway coaches.

2 Matherials and methods

2.1 Protocol and research question

This study was conducted following the six-stage methodological framework for scoping reviews established by Arksey and O'Malley [16], updated by Levac et al. [17], and expanded by the Joanna Briggs Institute (JBI) guidance [18] . The structural reporting of this review adheres strictly to the Preferred Reporting Items for Systematic Reviews and Meta-Analyses extension for Scoping Reviews (PRISMA-ScR) guidelines [19]. An internal a priori protocol was established prior to executing the search to define the eligibility criteria and data extraction variables; however, this protocol was not publicly registered in an external registry (such as OSF). All methodological steps were conducted strictly according to this predefined internal plan. A completed PRISMA-ScR checklist is provided in the Supplementary Material to ensure full reporting transparency.

To guide this scoping review within the Population–Concept–Context (PCC) framework, the primary research question was defined as follows:

- Primary Research Question: 'What passenger rail carbody suspension and vibration isolation technologies have been investigated over the past decade (2016–2026), under what operating conditions and suspension application points have they been evaluated, which direct comfort metrics or dynamic proxies were utilized for validation, and what structural evidence gaps remain in the literature?ć

To operate this inquiry, four secondary sub-questions were addressed:

- How are the mapped vibration isolation technologies distributed across control architectures (passive, pneumatic/hydraulic, semi-active, active, hybrid, etc) and suspension application points (primary, secondary, tertiary)?
- What range of operational train speeds and types characterizes the current literature?
- Which standardized ride comfort metrics (e.g., ISO 2631-1, EN 12299 NMV, Sperling Wz) and dynamic safety/response proxies (e.g., RMS acceleration, PSD, transmissibility, derailment safety) are applied across studies?
- What research gaps exist regarding low-cost, retrofit-ready mechanical suspension architectures for medium-speed operational fleets?'

2.2 Eligibility criteria

The eligibility criteria were structured using the Population–Concept–Context (PCC) framework with explicit operational definitions [18].

- Population: Mainline passenger railway vehicles, including intercity conventional coaches and high-speed electric multiple unit (EMU) carbodies, and urban passenger rail/metro lines operating across speed spectrums. Studies focusing on freight wagons, driving locomotive cabs, urban streetcars/trams (light rail transit without isolated bogie suspension), tilting trains, sleeper-only interior acoustics, or purely track-structure models were excluded.

- Concept: Primary, secondary, or tertiary suspension systems and dynamic vibration absorbers applied to suppress carbody vibrations.
- Context: Performance evaluations assessed through defined ride comfort metrics and vehicle dynamic proxies. Outcomes were stratified into:
  - Primary Outcomes (Direct Ride Comfort Metrics): Standardized comfort indices compliant with ISO 2631-1 (applying Wk vertical and Wd lateral weightings), EN 12299 / BS EN 12299 (NMV and CC(t) indices applying Wb vertical weighting), Sperling's index (Wz), or national standards (e.g., GB/T 5599).
  - Secondary Outcomes (Dynamic Proxies and Safety Indicators): Dynamic responses including carbody weighted/unweighted RMS accelerations, power spectral density (PSD), vibration transmissibility, and vehicle running safety standards (e.g., EN 14363 running characteristics and derailment coefficients) and secondary dynamic proxies such as track friendliness and wheel–rail interaction forces when directly evaluated against carbody vibration response.

In addition to the core PCC framework, specific methodological boundaries were established. To ensure scientific rigor and peer-reviewed quality control, inclusion was restricted to peer-reviewed journal publications indexed in Scopus, written in English, and published between 2016 and 2026 within the engineering discipline. English was selected to maintain consistent interpretation across international research outputs. Studies focusing exclusively on freight trains, heavy-haul locomotives, or track infrastructure without carbody/cabin interaction were excluded to maintain focus on passenger ride comfort objectives.

2.3 Search strategy

A systematic search was conducted in the Scopus database on April 22, 2026. The search query combined relevant keywords using Boolean operators and was applied to titles, abstracts, and keywords (TITLE-ABS-KEY): ("passenger train*" OR "railway vehicle*" OR "train cabin*" OR "carbody" OR "rolling stock") AND ("vibration isolat*" OR "vibration control" OR "suspension" OR "damper*" OR "semi-active" OR "active suspension" OR "tertiary suspension") AND ("ride comfort" OR "passenger comfort" OR "ISO 2631*" OR "EN 12299").

To maintain a reproducible focus, search limits were set in Scopus for publication dates (2016–2026), document type (journal articles), language (English), and subject area (engineering). Full-text retrieval was attempted for all 113 conceptually eligible records through institutional subscriptions and open-access repositories. Additional manual retrieval strategies, such as interlibrary loan requests or direct author contact, were not pursued. Reports unavailable in full text via these accessible institutional channels were recorded transparently as unretrieved studies (n = 76) in the PRISMA flow diagram.

The complete electronic database search strategy and exact query strings for Scopus are detailed in Supplementary File 3 (Sheet 5: Search Log).

2.4 Selection of sources of evidence

The selection of evidence sources was conducted using a transparent, multi-stage screening process mapped against the Population–Concept–Context (PCC) eligibility criteria:

- Stage 1 (Automated Database Limits & Subject Screening): The initial Boolean query in Scopus yielded 390 records. Applying Scopus automated database filters (publication period 2016–2026, journal articles only, and English language) refined the list to 137 records. A subject-area filter for engineering further narrowed this to 113 conceptually relevant records sought for retrieval. Of these, 37 full-text articles were successfully retrieved through institutional access and open repositories for full-text eligibility assessment, while 76 reports could not be retrieved due to subscription paywalls.
- Stage 2 (Blind Independent Screening via Rayyan): All 37 retrieved full-text articles were uploaded to the Rayyan web application. Full-text screening was conducted independently in a blind manner by four reviewers (Reviewers A, B, C, and D).
- Conflict Resolution & Mediation: Inter-rater agreement was evaluated based on decision unanimity without computing formal agreement statistics (such as Cohen's Kappa). Out of 37 full-text screening decisions, 32 studies achieved 100% unanimous agreement across all four reviewers (86.5% raw inter-rater consistency). The remaining 5 non-unanimous studies (13.5%) were resolved through formal consensus mediation meetings led by the senior reviewer (Reviewer A) with all co-reviewers (Reviewers B, C, and D), resulting in a final selection of 30 primary studies and 7 full-text exclusions (5 due to ineligible populations and 2 due to ineligible concepts).

2.5 Data charting process

Data extraction was executed using a standardized data charting form. Prior to full data extraction, the charting form was explicitly piloted on a sample of 5 initial articles by all four reviewers (Reviewers A, B, C, and D) to calibrate variable definitions, ensure categorical consistency, and refine coding rules. Integrated with Rayyan's metadata parsing, reviewers independently extracted key dynamic variables, suspension configurations, validation tiers, and comfort metrics for all 37 retrieved studies based on PCC definitions. All extracted data points across the final 30

included studies were systematically cross-checked, verified, and synthesized by the author team to guarantee data consistency.

The key data points included the following:

- Literature information: author and publication year
- Operational conditions: train speed (km/h)
- Technology details: type of damping system and its application (e.g., Primary, Secondary or Tertiary)
- Evaluation method: simulation or experimental approach, along with the comfort standard used (e.g., ISO 2631-1, EN 12299 NMV, Sperling W_z)
- Key Findings: Quantitative or qualitative results related to the effectiveness of vibration reduction and improvement of the comfort index.

The data collected were then examined through a narrative synthesis to identify the overall patterns in technological development, the relationship between operating speed and system selection, and areas where further research is still needed.

To acknowledge the varying levels of rigor across the mapped studies without performing a clinical-style critical appraisal, the extracted evidence was stratified into two distinct validation tiers based on engineering-evidence rubric:

- Tier 1 (Simulation with Experimental/Field Validation, n = 12): Studies utilizing multi-body dynamics (MBD) or finite element (FE) modeling integrated with laboratory test-rigs, hardware-in-the-loop (HIL) systems, or full-scale field track measurements.
- Tier 2 (Purely Numerical Simulation, n = 18): Studies relying strictly on theoretical dynamic modeling, analytical formulations, or numerical co-simulations under synthesized or measured track irregularities without physical prototype validation.

This stratification ensures that operational feasibility claims in the discussion distinguish between physical field-proven evidence and conceptual numerical findings.

To guarantee classification reproducibility and address multi-component systems, explicit coding rules were established across all extracted studies: (1) studies evaluating frequency-weighted human exposure standards (including ISO 2631-1, EN 12299, Sperling Wz, RTRI LT, and GB/T 5599) were coded as Direct Comfort Indices; (2) studies reporting unweighted physical acceleration RMS, PSD, or transmissibility were coded as Dynamic Response Proxies; (3) studies assessing derailment coefficients or wheel–rail interaction forces were coded as Running Safety Proxies; and (4) all studies utilizing resiliently mounted underfloor equipment as Dynamic Vibration Absorbers (DVAs) were uniformly coded under the Carbody-Mounted / Tertiary application point. Based on control/energy level, the five predefined technology categories are defined as follows:

- Advanced Passive Systems: Operate with zero external power injection. Includes conventional mechanics, inerters, non-linear rubber bushings, and dynamic vibration absorbers (DVAs).
- Smart Air / Fluid Springs Systems: Pneumatic or hydraulic systems focusing primarily on ride height and variable stiffness through fluid interconnections and leveling valves, distinct from rapid active actuators.
- Semi-Active Suspensions Systems: Require low power to continuously or discretely vary damping properties (e.g., Magnetorheological (MR) dampers or variable orifice valves) without injecting external force.
- Active Suspensions Systems: Require high power and external energy injection via electromechanical or hydraulic actuators to counteract dynamic forces directly.
- Hybrid ANVC Systems: Multi-domain configurations combining mechanical active/semi-active suspension control with acoustic noise cancellation (e.g., piezoceramic patches).

For studies evaluating multi-component systems (e.g., an air spring combined with a semi-active damper), the primary technology evaluated for ride comfort improvement dictated the primary categorical label.

Data extraction was conducted using a standardized data charting form developed in Rayyan and exported to Excel. The variables extracted included study metadata, vehicle classification, vibration dynamic issues, suspension mechanism, methodology/software, comfort metrics, and key quantitative outcomes. The complete codebook and variable definitions are provided in Supplementary File 3 (Sheet 6: Data Charting Form and Codebook).

3 Results and discussions

Due to the substantial heterogeneity across the 30 included studies—stemming from diverse simulation parameters, track excitation spectra, vehicle models, and evaluation standards (e.g., ISO 2631-1 weighted RMS acceleration versus EN 12299 NMV or Sperling's Wz)—a direct quantitative meta-analysis was unfeasible. Consequently, the synthesis focuses on qualitative structural mapping and directional performance trends rather than a global quantitative ranking. Percentage improvements and reduction ranges reported herein are strictly bound to each study's specific baseline models and operational conditions.

3.1 Search results and study selection

The initial systematic search across the Scopus database yielded 390 potential records. Applying automated database limits (publication period 2016–2026, only journal articles document type, and English language) excluded 253 records, leaving 137 records for initial screening.

A subject-area filter was then applied to exclude non-engineering papers, which removed an additional 24 records, leaving 113 conceptually relevant titles and abstracts. Of these 113 reports sought for retrieval, 76 articles could not be retrieved due to publisher access restrictions (non-open access), resulting in 37 full-text articles assessed for eligibility.

Detailed examination of these 37 full-text articles led to the exclusion of 7 studies that failed to fulfill the PCC eligibility criteria: 5 studies were excluded due to an ineligible population (e.g., freight locomotives or heavy-haul transport) and 2 studies were excluded due to an irrelevant concept (lacking focus on cabin vibration isolation or ride comfort metrics). Ultimately, 30 primary studies satisfied all criteria and were included for data extraction. The complete selection process is detailed in the updated PRISMA flow diagram Fig. 1.

A synthesis of the 30 included studies reveals key characteristics regarding suspension placement and performance evaluation frameworks. In terms of suspension application points, research remains heavily concentrated at the secondary suspension level (80.0%, n = 24), with fewer studies addressing primary suspension modifications (13.3%, n = 4) or multi-stage/carbody-mounted configurations (6.7%, n = 2). Regarding evaluation metrics, 23 studies (76.7%) report direct standardized comfort indices (including EN 12299, ISO 2631-1 weighted acceleration a_w, Sperling's Wz, RTRI L_T, and GB/T 5599), while 6 studies (20.0%) rely on unweighted dynamic response proxies (acceleration RMS, PSD, and transmissibility), and 1 study (3.3%) evaluates running safety parameters (EN 14363 derailment coefficient) without a direct passenger comfort index.

3.2 Characteristics of included literature

The 30 primary articles included in this review were published between 2016 and 2026 (up to the search cut-off date of April 22, 2026). The annual publication distribution within the included corpus is illustrated in Fig. 2. Research output showed a gradual increase over the decade, with annual publication counts of 1 in 2016, 2 in 2017, 0 in 2018, 2 in 2019, 4 in 2020, 2 in 2021, 2 in 2022, peaking at 8 articles in 2023, followed by 6 articles in 2024, 2 in 2025, and 1 indexed article in early 2026. This distribution demonstrates sustained research activity focusing on railway vehicle suspension optimization and ride comfort over the past decade. All 30 included studies (100%) employed multi-body dynamics or numerical simulation modeling to evaluate carbody vibration control. Among these, 12 studies (40%) incorporated experimental validation, component test-rig measurements, or field-collected track data (Tier 1 evidence), whereas 18 studies (60%) relied exclusively on numerical simulations (Tier 2 evidence).

Looking at the publication sources, these articles are distributed across several highly reputable engineering journals. Applied Sciences contributed the highest number of papers (n = 4), followed by Proceedings of the Institution of Mechanical Engineers, Part F: Journal of Rail and Rapid Transit, Archive of Mechanical Engineering, Journal of Low Frequency Noise, Vibration and Active Control, Advances in Mechanical Engineering, Vehicles, and RTRI Quarterly Report (each contributing n = 2 papers). This diversity confirms that ensuring train ride comfort requires a multidisciplinary engineering approach that integrates acoustics, vehicle dynamics, vibration control, and transport infrastructure.

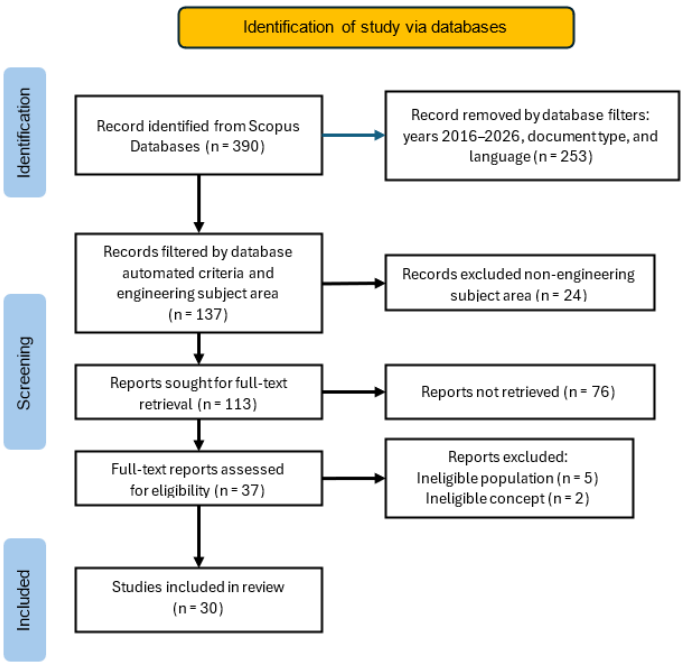

Fig. 1. PRISMA flow diagram outlining the study selection process

3.3 Mapping the evolution of cabin damping technologies

Based on the technical specifications obtained from the 30 primary papers, the current technology landscape was divided into five major groups using the defined energy/control taxonomy. Fig. 3 systematically maps the distribution of these technologies. Table 2 provides a concise analytical summary of the reviewed articles. It must be explicitly noted that two categories, Smart Air/Fluid Springs (n=1) and Hybrid ANVC (n=1)—contain only single studies. Findings for these n=1 categories represent very limited evidence and study-specific effects, rather than established broad technological patterns. To synthesize the extracted literature efficiently, the 30 included studies were categorized based on their suspension type, validation tier, and primary evaluation metrics. The complete, itemized 30-study data charting matrix is provided in Supplementary File 3, while a concise analytical summary of the mapped evidence is presented in Table 2 below.

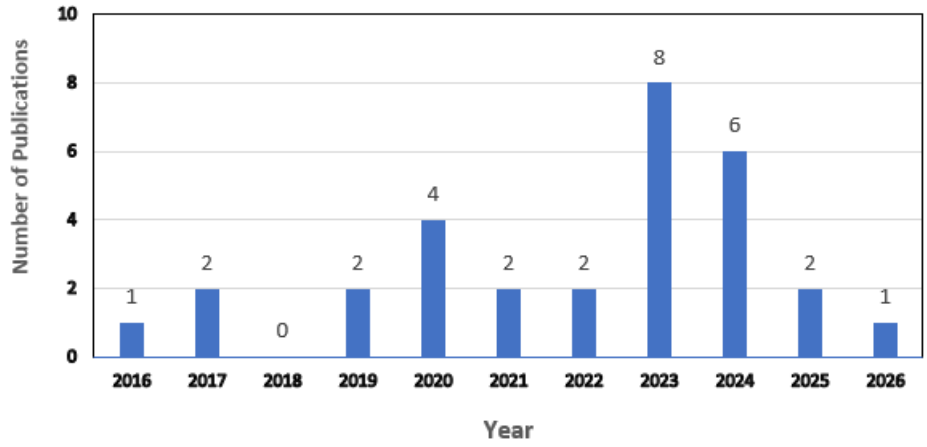

Fig. 2. Annual publication counts of primary studies on train cabin vibration and suspension systems within the included corpus (2016–2026; search cut-off date: April 22, 2026). The underlying data for this figure are provided in Supplementary File 3

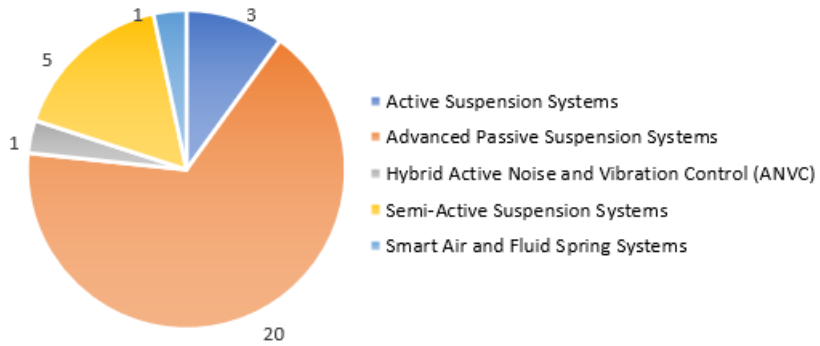

Fig. 3. Distribution of reviewed studies across five suspension technology groups over the past decade. The underlying data for this figure are provided in Supplementary File 3

The mapped studies span operational speeds ranging from 10 to 370 km/h across the five suspension technology categories. Rather than demonstrating a strict causal relationship or exclusive operational speed zones, the literature exhibits substantial speed overlap across categories. Advanced passive configurations are evaluated across the widest speed spectrum (10–370 km/h), semi-active systems focus on specific speed conditions (80 km/h and 160 km/h, with three studies omitting explicit speeds), and active systems target operational speeds at 120 km/h, 300 km/h, and 350 km/h. These distributions reflect specific study objectives and baseline vehicle models rather than rigid engineering deployment limits, as suspension selection is concurrently dictated by track irregularity profiles, carbody flexibility, target frequency bands, and power availability.

Table 2 Summary matrix of the 30 reviewed articles

Suspension Category	Study Count (n)	Speed Range (km/h)	Evidence Level Tier	Primary Comfort Metric	Key Summary Finding
Advanced Passive (Optimised Springs & Damping Mechanisms)	20	10 - 370 km/h (urban passenger rail / metro lines: 10-100km/h; Conventional: 80-130; High-Speed: 200-370)	Tier 1: 9 studies (Simulation + Experimental/Field Testing) Tier 2: 11 studies (Purely Numerical Simulation)	EN 12299 (NMV, NMVz, NMVy), Sperling Index (Wz), ISO 2631-1, Ride Quality Level (LT), Acceleration PSD/RMS	Passive optimization - achieved through anti-yaw damper tuning, inerter-based primary/secondary suspensions, high-damping elastic mounts for underfloor equipment, displacement-dependent rubber bushes, and wheel-rail contact conicity tuning - delivers robust vibration suppression and hunting resonance attenuation without external energy consumption.
Smart Air / Fluid Systems	1	350 km/h	Tier 2: 1 study (Purely Numerical Simulation)	EN 12299 (Continuous Comfort CC & Mean Comfort NMV)	Primary-stage Hydraulically Interconnected Suspensions (HIS) eliminate conventional design trade-offs, enabling softer vertical spring rates to enhance ride comfort while simultaneously providing passive roll stiffness to resist strong crosswinds at 350 km/h.
Semi-Active Suspension Systems	5	80 and 160 km/h (3 studies unspecified)	Tier 1: 2 studies (Simulation + Lab Test-Rig / MR HIL) Tier 2: 3 studies (Purely Numerical Simulation)	ISO 2631-1:1997, BS EN 12299:2009, Sperling Index (Wy), Acceleration Transmissibility & RMS	Semi-active strategies (Skyhook, Acceleration-Driven Damping, Hybrid Skyhook-DV, and variable MRE/MR devices) offer vibration isolation performance approaching active systems with low power consumption and baseline passive fallback capabilities.
Active Suspension Systems	3	120 km/h & 300 - 350 km/h	Tier 1: 1 study (Simulation + PSRD Lab Test-Rig Validation) Tier 2: 2 studies (Purely Numerical Simulation)	Sperling Index (Wz lateral & vertical), EN 12299 (NMVy & NMV), BS EN 12299:2009	Active suspension employing Model Predictive Control (MPC) with track preview or bio-inspired constraint-following control (ICFC-BIS) achieves high vibration attenuation (e.g., Sperling index reduction >60%) and suppresses high-speed carbody hunting. Meanwhile, primary suspension regenerative dampers (PSRD) focus primarily on energy harvesting while maintaining ride comfort comparable to the passive baseline.
Hybrid Active Noise and Vibration Control (ANVC)	1	200 km/h & 350 km/h	Tier 2: 1 study (Purely Numerical Simulation)	Power Spectral Density (PSD) & Root Mean Square (RMS) Acceleration	Integrating active secondary suspension for low-frequency rigid-body motion with piezoelectric actuators for high-frequency elastic carbody bending creates a multi-scale hybrid architecture that effectively mitigates high-speed train vibrations.
TOTAL / OVERALL	30	10 - 370 km/h	Tier 1 = 12 studies (40.0%) Tier 2 = 18 studies (60.0%)	EN 12299, ISO 2631-1, Sperling (Wz), GB/T 5599	Summary across 30 studies: 20 Advanced Passive, 5 Semi-Active, 3 Active, 1 Smart Air/Fluid, 1 Hybrid ANVC; 12 Tier 1 validated, 18 Tier 2 numerical simulations.

3.3.1 Advanced passive suspension systems

Advanced Passive Suspension SystemsAdvanced passive systems operate with zero external power injection by optimizing mechanical stiffness, damping, and inertance at the primary or secondary suspension interfaces. Within the mapped corpus (n = 20; Tier 1 = 9 studies [2, 5, 6, 20–25] , Tier 2 = 11 studies [1, 3, 4, 7, 8, 26–31]), sub-mechanisms target distinct structural vibration modes:

- Inerter-Based Mechanisms and DVAs: Target low-to-medium frequency carbody bouncing and pitching modes by replacing physical mass with inertance forces.
- Displacement-Dependent Rubber Bushes and Anti-Yaw Dampers: Mitigate lateral hunting motion and wheelset instability under higher operating speeds.
- High-Damping Elastic Equipment Mounts: Utilize suspended underfloor equipment as Dynamic Vibration Absorbers (DVAs) to suppress first carbody flexural bending modes.

While passive architecture exhibits mechanical simplicity, structural robustness, and zero power demand, their dynamic performance is inherently fixed to design baselines, offering no real-time adaptability to changing track irregularity profiles or severe crosswinds. However, their high modularity enables straightforward component replacement and excellent retrofit capability for existing operational fleets. The fundamental architecture, where these optimized components are strategically positioned within the primary and secondary suspension layers to mitigate such loads, is illustrated in Fig. 4.

Within the reviewed corpuses, advanced passive systems represent 20 out of the 30 included studies (66.7%), covering operational speed models from 10 to 370 km/h. This high research representation reflects a strong academic interest in passive parameter tuning and inertance integration due to their independence from external power sources and active sensors. However, this publication count reflects research activity within indexed literature and should be distinguished from commercial fleet deployment rates or operator procurement preferences, which require empirical lifecycle and fleet management data.

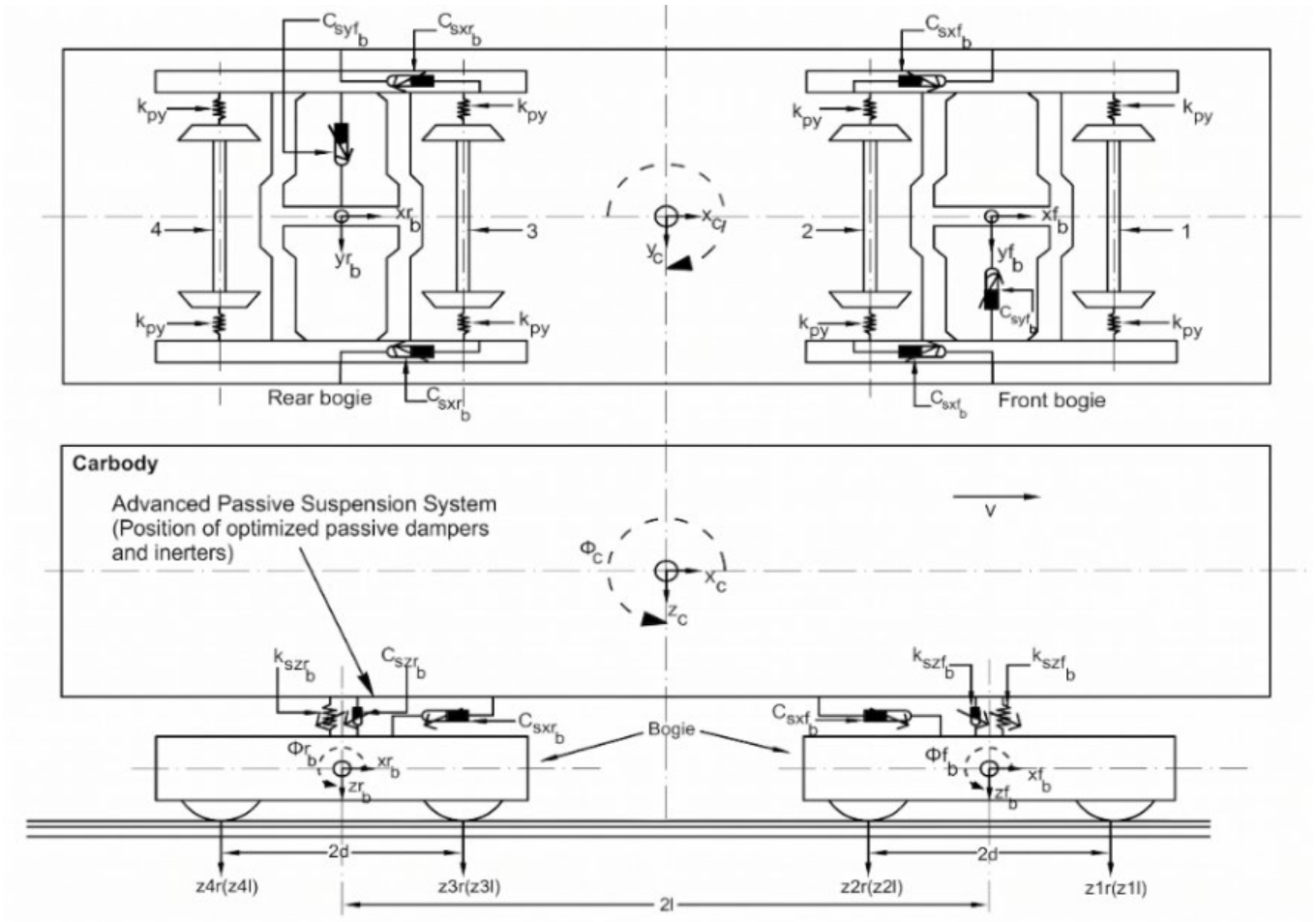

Fig. 4. Schematic representation of a rail vehicle bogie, illustrating the distinct positioning of the primary and secondary suspensions. Adapted from [32], CC BY 4.0

3.3.2 Smart air and fluid spring systems

Smart air and fluid spring systems utilize pneumatic or hydraulic interconnections to manage vehicle ride height, leveling, and variable vertical stiffness. Represented by a single numerical study in the reviewed corpus (n = 1; Tier 2 = 1 study [33]), primary-stage Hydraulically Interconnected Suspensions (HIS) target low-frequency carbody roll and vertical motion at operational speeds up to 350 km/h.

These configurations allow softer vertical spring rates to enhance passenger ride comfort while simultaneously providing passive roll stiffness to resist strong crosswinds. However, system operational risks include pneumatic/hydraulic seal leaks, fluid degradation, and valve wear, requiring continuous pressure monitoring and regular compressor servicing. Because this category is represented by only a single study (n = 1) [33] , these findings constitute very limited, study-specific evidence rather than established technological patterns. A visual representation of this interface, showing where air springs are typically installed between the bogie frame and carbody to support ride height control, is provided in Fig. 5.

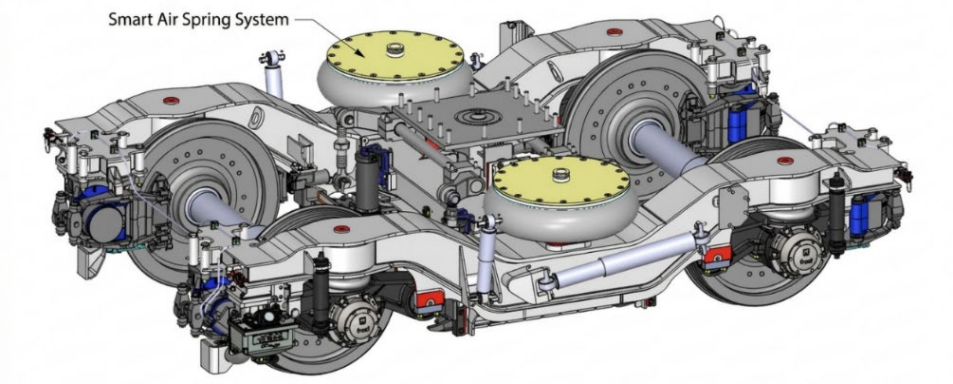

Fig. 5. Secondary suspension air spring layout between bogie frame and carbody. Adapted from [34], CC BY 4.0

3.3.3 Semi-active suspension systems

Semi-active suspensions continuously adjust fluid viscosity or orifice geometry (e.g., Magnetorheological (MR) dampers or variable orifice valves) using low-power Electronic Control Units (ECUs). Mapped across 5 primary studies (n = 5; Tier 1 = 2 studies [10, 35] , Tier 2 = 3 studies [9, 36, 37]), these systems target lateral and vertical carbody sway and low-frequency hunting oscillations using algorithms such as Skyhook, Acceleration-Driven Damping (ADD), and fuzzy logic.

Semi-active systems continuously modulate damping forces using low-power electronic control units. A practical engineering characteristic is their passive fallback capability: upon power loss or control signal failure, adjustable devices (e.g., MR dampers or variable orifice valves) revert to a baseline passive damping setting. Operational trade-offs include fluid sedimentation, sensor calibration drift, and added electronic diagnostic maintenance. Operational trade-offs include MR fluid sedimentation, sensor calibration drift, and added ECU diagnostic maintenance. A schematic of the dynamic model and the specific placement mechanism of these components, including the MR damper (Cy) and MRE device (Ky) within the lateral secondary suspension layer, are illustrated in Fig. 6.

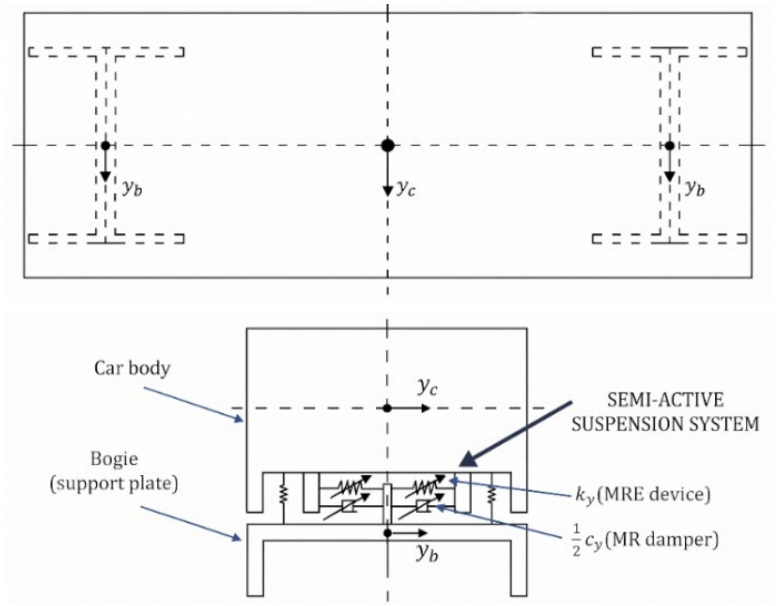

Fig. 6. Schematic placement of MR damper and MRE device in lateral secondary suspension. Adapted from [35], CC BY 4.0

3.3.4 Active suspension systems

Fully active suspensions inject external forces directly into the vehicle via electromechanical or hydraulic actuators installed within secondary suspension layers. Mapped across 3 primary studies (n = 3; Tier 1 = 1 study [12], Tier 2 = 2 studies [11, 38]), active controllers (such as Model Predictive Control with track preview or bio-inspired constraint-following control) target broadband carbody vibration suppression and severe hunting instability at high speeds (120-350 km/h).

Active force control achieves substantial vibration attenuation (e.g., bio-inspired ICFC-BIS control in Zhao et al. [11] achieves Sperling index reductions exceeding 60%, and preview MPC in Posseckert et al. [38] optimizes lateral NMV_y). In contrast, primary regenerative suspensions (Wang et al. [12]) focus on energy harvesting while maintaining ride comfort comparable to baseline passive levels. However, practical deployment across active architecture remains constrained by high power demands, capital costs, and electronic vulnerability. A schematic of this setup, highlighting the installation interface of an actuator within the lateral secondary suspension to inject the controlled forces, is shown in Fig. 7.

3.3.5 Hybrid active noise and vibration control (anvc)

Hybrid ANVC integrates multi-domain actuators to simultaneously address low-frequency rigid-body motion and high-frequency structural noise. Evaluated in 1 numerical study (n = 1; Tier 2 = 1 study [13]), secondary active actuators manage low-frequency carbody rigid-body motion, while distributed piezoceramic patches on carbody panels attenuate high-frequency flexural bending and structural acoustic noise at speeds of 200-350 km/h.

Hybrid ANVC provides multi-scale cabin comfort management. However, it introduces extreme system complexity, high failure vulnerabilities due to multi-channel sensor arrays, and very poor retrofitting capability, as installation demands structural modifications to carbody panels and cabin linings. The conceptual placement of this hybrid arrangement, where active actuators manage the secondary suspension interface and piezoelectric patches are distributed on the carbody structure, is illustrated in Fig. 8.

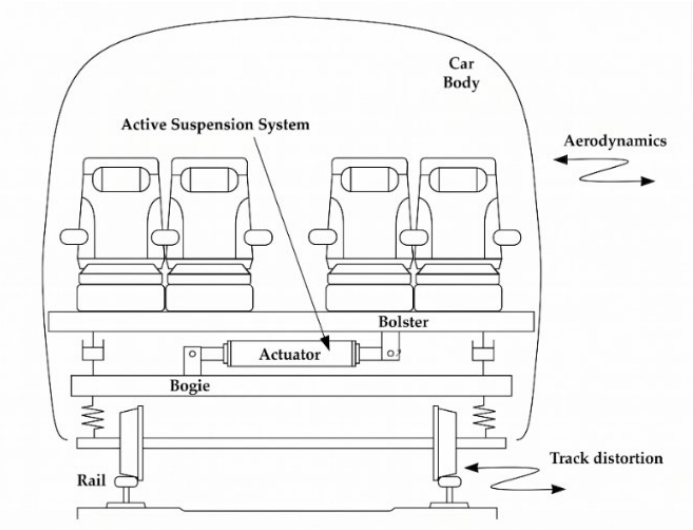

Fig. 7. Actuator placement for active lateral secondary suspension in a railway vehicle.Adapted from [39] , CC BY 4.0

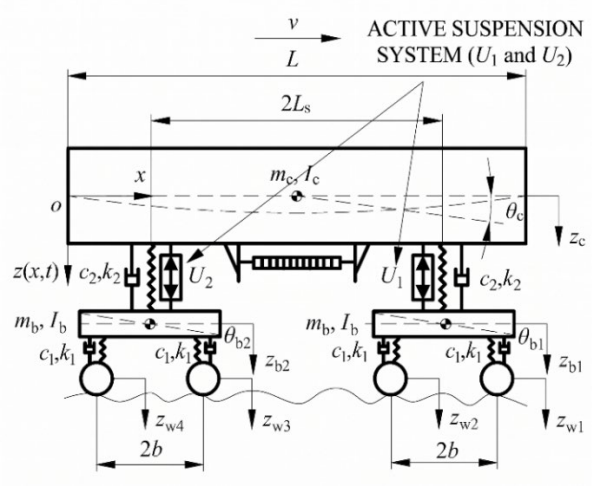

Fig. 8. Conceptual placement of a hybrid vibration-control arrangement for a railway carbody. Adapted from [13], CC BY 4.0

3.4 Compliance with standards and comfort evaluation metrics

By examining 30 main articles, we found two primary pillars used to validate cabin suspension performance: ISO 2631-1 and EN 12299. Even when studies do not explicitly claim validation against these two standards, they frequently apply the underlying mathematical weighting functions required by them. Overall, this analysis highlights how researchers manage to put a hard number on passenger "comfort" from a strictly mechanical engineering perspective.

3.4.1 Dominant evaluation metrics

The most common metric in literature is the weighted acceleration (a_w), which is expressed as the root mean square (RMS). Applying frequency weighting is critical because the human body reacts differently to different vibration frequencies. Ride comfort assessment relies on frequency-weighted acceleration thresholds tailored to human vibration sensitivity. Under ISO 2631-1, vertical whole-body vibration in seated passengers is evaluated using the W_k weighting function, whereas lateral vibration applies the W_d weighting function. Conversely, the European standard EN 12299 (and its national adoption BS EN 12299:2009) incorporates the W_b weighting function specifically optimized for vertical railway carbody vibration to compute Continuous Comfort ($C_C(t)$) and Mean Comfort (NMV) indices. Dynamic safety indicators—such as running stability under EN 14363 or derailment coefficients—serve as vehicle acceptance proxies rather than direct passenger comfort metrics and are categorized separately in this review [3].

Conversely, research targeting high-speed operations (over 250 km/h) frequently applies the EN 12299 standard to calculate Mean Comfort (NMV) and Continuous Comfort (CC) indices (e.g., Dumitriu [26] , Isacchi & Ripamonti [33], Posseckert [38], Wang et al. [12]), as it provides specialized frequency weighting functions (Wb) tailored to railway carbody dynamics.

3.4.2 Technology effectiveness against standards

The review uncovered some interesting trends regarding comfort scores:

- Passive Technologies: Studies conducted at 120–160 km/h show that optimizing passive parameters and adding components, such as inerters, successfully maintains the comfort index in the "not uncomfortable" category according to the ISO 2631-1 scale [8, 20].
- Active and Semi-Active Technologies: Under high operational speeds (300–370 km/h), numerical simulations indicate that active and semi-active control architectures provide enhanced attenuation of lateral and vertical accelerations compared to conventional un-tuned passive configurations. Several studies report that active force control can maintain frequency-weighted RMS accelerations below the ISO 2631-1 threshold of 0.315 m/s2 ('not uncomfortable' category) or achieve a Sperling comfort index (Wz) below 2.5 ('just noticeable' vibration under Sperling evaluation framework) under severe track irregularity inputs. However, the relative performance improvement depends strongly on track quality, carbody flexibility, vibration direction, and sensor positioning.

3.5 Identification of research gaps

Despite the rapid advancements in active and semi-active suspensions for high-speed trains, this review identified several major gaps that offer clear opportunities for future research.

- Lack of Cross-Standard Comparisons: Very few studies evaluate their results using both ISO 2631-1 and EN 12299 simultaneously for the exact same technology.
- Conventional Speed Gap: Most smart innovations (active/semi-active) heavily target speeds over 250 km/h. However, medium-speed trains (120 km/h) require vibration isolation solutions that are both robust and inexpensive to maintain yet still perform close to the level of active systems.
- Focus on Conventional Passive Components: The vast majority of mapped passive suspension studies remain confined to parameter optimization of conventional elements, such as steel coil springs, yaw dampers, and elastomeric bushes. There is limited exploration of alternative mechanical architectures or additional isolation stages (tertiary suspension layers) within the peer-reviewed railway literature covered by this search.

3.6 Global relevance of medium speeds and the high publication share of passive systems

The mapped distribution demonstrates that 20 of the 30 included primary studies (66.7%) focus on advanced passive suspension configurations. It is important to contextualize this finding: the high percentage is partly an artifact of a broad passive taxonomy that encompasses diverse mechanical sub-components (such as inerters, dynamic vibration absorbers, non-linear rubber bushings, and suspended underfloor masses) compared to specialized active control groups. Furthermore, while academic modeling heavily investigates passive options due to their zero-power draw and well-established dynamic models, claims regarding real-world market dominance or engineering procurement preference cannot be inferred from publication counts alone. Appropriate uncertainty must also be attached to categories with minimal representation, such as Smart Air/Fluid springs ($n = 1$) and Hybrid ANVC ($n = 1$), where findings reflect study-specific outcomes rather than industry-wide trends. This suggests that improving ride comfort at medium operating speeds (120–200 km/h) remains a key concern.

From a practical perspective, medium operating speeds (approximately 100–160 km/h) remain a widely adopted operational benchmark across global intercity rail networks, representing a balance between infrastructure capability, lifecycle cost, and service reliability. The mapped corpus reveals that 20 out of 30 included studies (66.7%) investigate advanced passive suspension configurations across speed ranges from 10 to 370 km/h. Within this passive group, evidence is split between purely numerical simulation models (*n = 11,* tier 2) and combined simulation-experimental/field validations (*n = 9,* tier 1). Rather than indicating an absolute operational fleet preference, this publication share demonstrates that passive parameter tuning, dynamic vibration absorbers, and inerter integration remain the most widely modeled research approaches for balancing ride comfort (evaluated via RMS accelerations or Wz indices) against maintenance simplicity and zero power draw. However, translating these publication counts into real-world operational readiness requires evaluating the specific excitation realism and structural validation level of each study.

3.7 Deployment barriers and trade-offs of active suspensions

Over the past decade, studies on semi-active and active suspensions have demonstrated enhanced acceleration reduction [11, 13, 35]. However, literature consistently points out the hurdles of real-world deployment. Systems that rely on actuators, sensors, and real-time algorithms present significant operational constraints: high initial investment costs and high vulnerability to operational failures.

From a fleet lifecycle perspective, the adoption of fully active control systems for conventional or medium-speed passenger services (e.g., operating at approximately 120 km/h) involves a critical engineering trade-off. While active control provides superior vibration attenuation, its implementation introduces additional capital expenditure, continuous onboard power consumption, and ongoing diagnostic maintenance requirements for sensors and actuators. Consequently, for operational fleets operating under moderate track irregularity profiles where passive parameters can adequately meet standardized comfort thresholds (such as ISO 2631-1 or Sperling Wz), active suspension architectures may introduce unnecessary electromechanical complexity relative to the incremental comfort gains achieved. A qualitative comparison of the operational characteristics, structural trade-offs, and retrofitting constraints across the five technology categories is summarized in Table 3. This matrix represents an author-synthesized engineering appraisal derived from system dynamic architectures and primary study reporting, supplemented by evidence counts (*n*) to reflect varying levels of literature support. Operational recommendations regarding suspension selection must be interpreted in light of these evidence tiers. While Tier 2 numerical simulations provide essential preliminary insights into parameter optimization, implementation readiness and fleet retrofit decisions require Tier 1 validation to confirm dynamic performance under real-world track irregularities, structural compliance, and operational fatigue.

Table 3. Qualitative engineering assessment matrix of damping technology categories

Technology Category	Evidence Base (n)	Implementation & System Complexity	Maintenance & Diagnostic Burden	Operational & Failure Characteristics	Retrofitting Capability
Advanced Passive Systems	n = 20	Low to Moderate: Mechanical spring/ damper tuning, inerters, and DVA mounts.	Low: Standard mechanical inspections; susceptible to mechanical wear, fatigue, and bushing degradation.	High Passive Reliability: No active electrical sensors; performance degrades gradually via mechanical wear rather than dynamic control fault.	High: Modular replacement of conventional bogie/carbody components.
Smart Air / Fluid Springs	n = 1 (Limited)	Moderate: Pneumatic lines, air reservoirs, and interconnected fluid valves.	Moderate: Requires pneumatic pressure monitoring, seal leak checks, and compressor servicing.	Moderate to High: Relies on mechanical fluid dynamics; prone to pneumatic pressure loss or valve wear.	Moderate: Requires minor air-line integration and height-valve alignment.
Semi-Active Suspensions	n = 5	High: Variable or MR dampers, sensor arrays, and low-power controllers.	High: Sensor calibration, electronic control unit (ECU) diagnostics, and MR fluid degradation monitoring.	Moderate (Fail-Safe Aware): Reverts to passive baseline damping upon power or signal failure.	Restricted: Requires external power wiring, sensor mounting, and ECU bracket integration.

Technology Category	Evidence Base (n)	Implementation & System Complexity	Maintenance & Diagnostic Burden	Operational & Failure Characteristics	Retrofitting Capability
Fully Active Suspensions	n = 3	Very High: Hydraulic/electromechanical actuators, continuous high-power supplies, real-time controllers.	Very High: High-pressure hydraulic maintenance, actuator fluid seals, sensor calibration, complex algorithmic tuning.	Vulnerable to Control Faults: Requires redundancy; system instability or total force loss if actuators or sensors fail.	Poor: Requires extensive bogie frame modifications and dedicated chassis power routing.
Hybrid ANVC Systems	n = 1 (Limited)	Very High: Combined secondary actuators, piezoceramic patch arrays, and dual acoustic/vibration controllers.	Very High: Specialized piezoceramic patch diagnostics, transducer monitoring, and dual-loop signal tuning.	Vulnerable to Sensor Failure: Complex multi-channel sensor arrays increase total system failure points.	Very Poor: Demands structural modification of carbody panels and interior cabin linings.

3.8 Identifying gaps in mechanical architecture innovation

Within the scope of the mapped passive literature, most research concentrates on the incremental parameter optimization of conventional elements, such as adjusting coil spring stiffness, anti-yaw damping, and elastomeric bush compounds [6, 8, 13].

To address potential environmental degradation and cyclic aging in elastomeric or hydraulic components, alternative mechanical architectures—such as retrofittable all-metal tertiary suspensions (e.g., Wire Rope Isolators)—warrant consideration as a prospective research hypothesis for future fleet comfort upgrades. WRI mechanisms offer multi-directional flexibility and high dry-friction energy dissipation through strand-to-strand friction.

However, evaluating the feasibility of WRI as a railway tertiary suspension requires a rigorous engineering framework addressing several technical constraints:

- Nonlinear Hysteresis & Tuning: The displacement-dependent stiffness and hysteretic damping of wire ropes require precise dynamic modeling to prevent unwanted resonance with carbody bending modes.
- Mechanical Degradation: While all-metal isolators eliminate elastomer thermal aging, they remain susceptible to internal fretting wear, strand fatigue under high cyclic loading, and potential corrosion in harsh operating environments.
- Integration & Space Constraints: Retrofitting tertiary WRI assemblies beneath carbody mountings necessitates evaluating static load capacity, working stroke, vertical-lateral dynamic coupling, and impact on vehicle ride height without compromising running safety.

3.9 The urgency of designing for retrofit flexibility

Another major technical challenge identified is the need for installation flexibility. Improving the comfort index of operational passenger cars cannot rely solely on procuring brand-new rolling stock. Proposed solutions must seamlessly integrate into existing bogie and carbody architecture. Future passive suspension innovations must pivot toward modular designs that allow direct retrofitting at the carbody interface to enhance ride comfort compliant with ISO 2631-1 standards.

3.10 Limitations

While this scoping review provides a comprehensive mapping of railway carbody vibration control technologies over the past decade, several methodological and structural limitations must be acknowledged:

- Single Database Scope: The search was restricted to Scopus, potentially omitting relevant studies indexed exclusively in other databases (e.g., IEEE Xplore, Web of Science, or national repositories).
- Access Restrictions and Unretrieved Literature: Full-text retrieval was constrained by institutional subscription access, resulting in 76 conceptually relevant records remaining unretrieved behind publisher paywalls. This unretrieved subset presents a potential retrieval bias. Specifically, subscription-based journals may publish a higher proportion of proprietary active control algorithms, commercial hardware-in-the-loop (HIL) test-rig validations, or operator-funded field trials that are less frequently disclosed in open repositories. Consequently, the observed technological distribution—where advanced passive systems dominate (66.7%)—might slightly overestimate the relative academic output share of passive configurations while underrepresenting commercially restricted active or semi-active suspension developments.

- Partial-Year Window (2026): The search window covers 2016 through mid-2026; thus, 2026 data reflects an incomplete calendar year rather than a decline in research output.
- Single-Study Categories (n=1): Smart Air/Fluid Springs (n=1) and Hybrid ANVC (n=1) categories reflect single-study findings and cannot be generalized as broad technological trends.
- Metric and Methodological Heterogeneity: Heterogeneous comfort metrics (EN 12299, ISO 2631-1, Sperling Wz, GB/T 5599) and unweighted dynamic proxies (acceleration RMS/PSD) precluded direct quantitative meta-analysis.
- Missing Operational Speeds: Operational speed parameters (km/h) were unspecified in certain benchmark studies, limiting full speed-dependent cross-comparisons.
- Predominance of Simulation over Field Testing: 60% of the mapped corpus relies solely on multi-body dynamic (MBD) or finite element (FE) numerical simulations under idealized track irregularities. Experimental test-rig or full-scale field validation data remain limited, restricting direct conclusions regarding operational durability and real-world performance.
- Publication Share vs. Fleet Adoption: Publication proportions reflect research concentration in indexed literature rather than commercial fleet adoption rates, procurement preferences, or operator lifecycle costs.
- Absence of Formal Critical Appraisal: Formal risk-of-bias critical appraisal was omitted, as scoping review protocols focus on mapping evidence breadth and validation tiers rather than evaluating study quality.

4 Conclusions

This scoping review mapped the peer-reviewed literature from 2016 to 2026 regarding railway carbody vibration control technologies for passenger ride comfort, yielding four main conclusions aligned with the review objectives:

- Technological Taxonomy and Distribution (RQ1): The mapped corpus (n = 30) spans five major technology categories, with advanced passive configurations representing the largest publication share (66.7%, 20/30 studies), followed by semi-active suspensions (16.7%, 5/30), fully active systems (10.0%, 3/30), smart air/fluid springs (3.3%, 1/30), and hybrid ANVC (3.3%, 1/30). Suspension applications remain heavily concentrated at the secondary suspension level (80.0%), with limited focus on multi-stage or tertiary placement. However, this distribution reflects academic research concentration in indexed literature rather than verified market adoption or operator procurement preferences.
- Operational Speeds and Validation Rigor (RQ2): Although operational speeds span a broad range (10 to 370 km/h), dynamic modeling research remains predominantly focused on numerical simulations (18/30 studies, 60.0%) under modeled track irregularities. Only 12 studies (40.0%) provided combined simulation and experimental or field test-rig validation (Tier 1 evidence), highlighting a persistent evidence gap between theoretical dynamic modeling and physical testing.
- Comfort Standards and Indicator Mapping (RQ3): Heterogeneity exists across evaluation metrics. Direct passenger comfort standards—primarily EN 12299 (NMV), ISO 2631-1 weighted acceleration, Sperling's index (Wz), RTRI LT, and GB/T 5599—are evaluated in 23 studies, while 6 studies rely on dynamic response proxies (RMS acceleration, PSD, transmissibility) and 1 study evaluates running safety indicators without a direct comfort index.
- Future Research Directions (RQ4): While advanced passive configurations avoid active sensor vulnerabilities and external power demands, practical implementation claims must be interpreted cautiously due to limited field-validated evidence. The literature reveals a lack of architectural innovation for medium-speed operational fleets (approximately 120 km/h). Future research should pivot toward exploring innovative, retrofit-friendly mechanical passive architecture such as metal-mesh or friction-based tertiary isolators—supported by comprehensive dynamic modeling, engineering feasibility frameworks, and experimental field validation to achieve low-cost, durable comfort upgrades for mass transport fleets.

5 Acknowledgements

This research is funded by the Indonesian Endowment Fund for Education (LPDP) on behalf of the Indonesian Ministry of Higher Education, Science and Technology and managed under the EQUITY Program (Contract No. 4299/B3/DT.03.08/2025 & No 3029/PKS/ITS/2025).

6 References

[1] Dumitriu, M., & Dihoru, I. I. (2021). Influence of bending vibration on the vertical vibration behaviour of railway vehicles carbody. *Applied Sciences*, 11(18), Article 8502. https://doi.org/10.3390/app11188502

[2] Li, Y., Chi, M., Guo, Z., & Liang, S. (2023). An abnormal carbody swaying of intercity EMU train caused by low wheel–rail equivalent conicity and damping force unloading of yaw damper. *Railway Engineering Science,* 31(3), 252–268. https://doi.org/10.1007/s40534-022-00295-w

[3] Dumitriu, M., & Stănică, D. I. (2021). Study on the evaluation methods of the vertical ride comfort of railway vehicle—Mean comfort method and Sperling's method. *Applied Sciences*, 11(9), Article 3953. https://doi.org/10.3390/app11093953

[4] Park, J. (2023). Suspension parameters for low-damped carbody oscillation of high-speed railway vehicle. *Advances in Mechanical Engineering, 15(12)*. https://doi.org/10.1177/16878132231219574

[5] Sadeghi, J., Rabiee, S., & Khajehdezfuly, A. (2020). Development of train ride comfort prediction model for railway slab track system. *Latin American Journal of Solids and Structures, 17(7),* 1–22. https://doi.org/10.1590/1679-78256237

[6] Aida, K., Tomioka, T., Akiyama, Y., & Takigami, T. (2017). Development of displacement-dependent rubber bush for yaw damper to prevent carbody vertical vibration. *Quarterly Report of RTRI, 58(3),* 182–188. https://doi.org/10.2219/rtriqr.58.3_182

[7] Dumitriu, M. (2016). Influence of suspended equipment on the carbody vertical vibration behaviour of high-speed railway vehicles. *Archive of Mechanical Engineering, 63(1)*, 145–162. https://doi.org/10.1515/meceng-2016-0008

[8] Chen, D., Liu, C., Xia, Z., Sun, G., Zhang, R., & Song, R. (2026). Analysis of sensitive wavelengths in railway vehicles with different inerter-based suspension systems. *Mechanical Sciences, 17(1)*, 333–346. https://doi.org/10.5194/ms-17-333-2026

[9] Huynh, T.-L., & Shiao, Y. (2025). New improved on–off damping force control algorithm for modern hybrid-damper-based lateral suspension systems in railway vehicles. *Journal of Low Frequency Noise, Vibration and Active Control*. https://doi.org/10.1177/14613484251399956

[10] Jeniš, F., Kubík, M., Michálek, T., Strecker, Z., Žáček, J., & Mazůrek, I. (2023). Effect of the magnetorheological damper dynamic behaviour on the rail vehicle comfort: Hardware-in-the-loop simulation. *Actuators, 12(2),* Article 47. https://doi.org/10.3390/act12020047

[11] Zhao, J., Zhang, H., Ling, L., Zhang, Z., Wang, K., & Zhai, W. (2023). Bio-inspired structure constraints following control for enhancing hunting stability of high-speed trains. *IET Control Theory & Applications, 18(3)*, 316–334. https://doi.org/10.1049/cth2.12562

[12] Wang, H., Zhang, X., Wang, R., & Feng, G. (2024). A simulation approach for analysis of the regenerative potential of high-speed train suspensions. *Energies, 17(14)*, Article 3496. https://doi.org/10.3390/en17143496

[13] Cao, H., Li, G., & Liang, N. (2022). Active vibration control of railway vehicle car body by secondary suspension actuators and piezoelectric actuators. *IEEE Access, 10,* 105404–105411. https://doi.org/10.1109/ACCESS.2022.3210968

[14] Fu, B., Giossi, R. L., Persson, R., Stichel, S., Bruni, S., & Goodall, R. (2020). Active suspension in railway vehicles: A literature survey. *Railway Engineering Science*. https://doi.org/10.1007/s40534-020-00207-w

[15] Li, Y., & Chen, Y. (2026). From track to stability: A review of vibration behavior, structural reliability, and dynamic performance in railway vehicles. *Sound and Vibration*. https://doi.org/10.59400/sv4444

[16] Arksey, H., & O'Malley, L. (2005). Scoping studies: Towards a methodological framework. *International Journal of Social Research Methodology, 8(1),* 19–32. https://doi.org/10.1080/1364557032000119616

[17] Levac, D., Colquhoun, H., & O'Brien, K. K. (2010). Scoping studies: Advancing the methodology. *Implementation Science,* 5, Article 69. https://doi.org/10.1186/1748-5908-5-69

[18] Peters, M. D. J., Marnie, C., Tricco, A. C., Pollock, D., Munn, Z., Alexander, L., … Khalil, H. (2020). Updated methodological guidance for the conduct of scoping reviews. *JBI Evidence Synthesis, 18(10),* 2119–2126. https://doi.org/10.11124/JBIES-20-00167

[19] Tricco, A. C., Lillie, E., Zarin, W., O'Brien, K. K., Colquhoun, H., Levac, D., … Straus, S. E. (2018). PRISMA extension for scoping reviews (PRISMA-ScR): Checklist and explanation. *Annals of Internal Medicine, 169(7)*, 467–473. https://doi.org/10.7326/M18-0850

[20] Torun, Y. E., & Erol, H. (2025). A trade-off study among ride comfort and safety against derailment in the rail vehicle suspension design. *Journal of Vibration Engineering & Technologies, 13(6),* 393. https://doi.org/10.1007/s42417-025-01925-3

[21] Aida, K., Takigami, T., & Akiyama, Y. (2022). Verification of reduction effect of vertical vibration of car-body by high-damping elastic support of under-floor equipment. *Quarterly Report of RTRI, 63(4),* 251–256. https://doi.org/10.2219/rtriqr.63.4_251

[22] La Paglia, I., Rapino, L., Ripamonti, F., & Corradi, R. (2023). Modelling and experimental characterization of secondary suspension elements for rail vehicle ride comfort simulation. Proceedings of the Institution of Mechanical Engineers, Part F: *Journal of Rail and Rapid Transit, 238(1),* 38–47. https://doi.org/10.1177/09544097231178858

[23] Yu, Y., Song, Y., Zhao, L., & Zhou, C. (2023). Analytical formulae and applications of vertical dynamic responses for railway vehicles. *Strojniški vestnik - Journal of Mechanical Engineering, 69(1–2),* 73–81. https://doi.org/10.5545/sv-jme.2022.375

[24] Yang, S., Li, F., Wu, P., & Gong, J. (2024). Study of resonance between bogie hunting and carbody mode via field measurements and dynamic simulation. *Sensors, 24(16),* Article 5194. https://doi.org/10.3390/s24165194

[25] Wu, Y., Zeng, J., Qu, S., Shi, H., Wang, Q., & Wei, L. (2020). Low-frequency carbody sway modelling based on low wheel-rail contact conicity analysis. *Shock and Vibration, 2020,* 1–17. https://doi.org/10.1155/2020/6671049

[26] Dumitriu, M., & Stănică, D. I. (2020). Effect of the anti-yaw damper on carbody vertical vibration and ride comfort of railway vehicle. *Applied Sciences, 10(22),* 1–18. https://doi.org/10.3390/app10228167

[27] Dižo, J., Blatnický, M., Steišūnas, S., & Vaičiūnas, G. (2019). Influence of suspension parameters changes of a railway vehicle on output quantities. *LOGI – Scientific Journal on Transport and Logistics, 10(1),* 20–29. https://doi.org/10.2478/logi-2019-0003

[28] Dumitriu, M., & Cruceanu, C. (2017). Influences of carbody vertical flexibility on ride comfort of railway vehicles. *Archive of Mechanical Engineering, 64(2),* 221–238. https://doi.org/10.1515/meceng-2017-0014

[29] Park, J. (2024). Design method for suspension parameters of high-speed railway vehicles considering uncertainties. *Advances in Mechanical Engineering, 16(6)*. https://doi.org/10.1177/16878132241262683

[30] Lewis, T. D., Li, Y., Tucker, G. J., Jiang, J. Z., Zhao, Y., Neild, S. A., … Dinmore, N. (2019). Improving the track friendliness of a four-axle railway vehicle using an inertance-integrated lateral primary suspension. *Vehicle System Dynamics, 59(1)*, 115–134. https://doi.org/10.1080/00423114.2019.1664752

[31] Dumitriu, M., & Apostol, I. I. (2023). The effect of the traction rod on the vertical vibration behavior of the railway vehicle carbody. *Vehicles, 5(4),* 1482–1504. https://doi.org/10.3390/vehicles5040081

[32] Sharma, S. K., Sharma, R. C., Choi, Y., & Lee, J. (2023). Modelling and dynamic analysis of adaptive neuro-fuzzy inference system-based intelligent control suspension system for passenger rail vehicles using magnetorheological damper for improving ride index. *Sustainability, 15(16),* Article 12529. https://doi.org/10.3390/su151612529

[33] Isacchi, G., & Ripamonti, F. (2024). On the implementation of hydraulic-interconnected-suspensions at the primary suspension stage of high-speed rail vehicles. *Proceedings of the Institution of Mechanical Engineers, Part F: Journal of Rail and Rapid Transit, 238(9),* 1096–1107. https://doi.org/10.1177/09544097241257550

[34] Miklasz, R., Dawid, S., Wojtukiewicz, P., & Grzegórski, M. (2022). Bogie design of 227M type rail vehicle. *Rail Vehicles/Pojazdy Szynowe, (1–2)*, 40–48. https://doi.org/10.53502/rail-150309

[35] Jin, T., Liu, Z., Sun, S., Ren, Z., Deng, L., Yang, B., … Li, W. (2020). Development and evaluation of a versatile semi-active suspension system for high-speed railway vehicles. *Mechanical Systems and Signal Processing, 135,* Article 106338. https://doi.org/10.1016/j.ymssp.2019.106338

[36] Shiao, Y., & Huynh, T.-L. (2024). A new hybrid control strategy for improving ride comfort on lateral suspension system of railway vehicle. *Journal of Low Frequency Noise, Vibration and Active Control, 43(4),* 1842–1859. https://doi.org/10.1177/14613484241254762

[37] Shiao, Y., & Huynh, T.-L. (2024). New mixed skyhook and displacement–velocity control for improving the effectiveness of vibration isolation in the lateral suspension system of a railway vehicle. *Applied Sciences, 14(24),* Article 11680. https://doi.org/10.3390/app142411680

[38] Posseckert, A., & Lüdicke, D. (2023). Ride comfort improvements on disturbed railroads using model predictive control. *Vehicles, 5(4),* 1353–1366. https://doi.org/10.3390/vehicles5040074

[39] Yoon, J. H., Kim, D., Park, N. C., & Park, Y. P. (2017). Design of a tubular permanent magnet actuator for active lateral secondary suspension of a railway vehicle. *Applied Sciences, 7(2),* Article 152. https://doi.org/10.3390/app7020152

7 Conflict of Interest statement

The authors declared no potential conflicts of interest.

8 Author contributions

Achmad Syaifudin : conceptualization, methodology, screening supervision & mediation, formal analysis, writing – review & editing, funding acquisition. Galih Nanda Dewa: conceptualization, methodology, search query design, full-text screening, data extraction, writing – original draft, project administration. Meifal Rusli: methodology, full-text screening, data charting, reference verification. Feblil Huda: methodology, full-text screening, data charting, prisma checklist compilation. Yani Kurniawan: data extraction verification, figure & schematic conceptions, writing – review & editing. Wiwiek Hendrowati: technical audit of ride comfort standards, writing – review & editing. Wahyu Sulistiyo: categorical coding audit, evidence stratification, writing – review & editing. Ridho Dwimansyah: visualization & mechanical schematics conceptions, reference traceability audit, writing – review & editing. Jean Mario Valentino: structural validation, review & editing of final manuscript, supervision.

9 Data availability statement

All relevant data supporting the findings of this scoping review are fully available within the article and its accompanying supplementary materials (Supplementary Files 1–3), including the search strategy, data charting codebook, list of unretrieved reports, and underlying datasets for figures.

10 Supplementary materials

The following supplementary materials are available online alongside the main text of this article:

- Supplementary File 1: PRISMA-ScR Checklist providing itemized compliance reporting and corresponding manuscript page numbers.
- Supplementary File 2: Full-Text Study Exclusion Matrix based on PCC (Population, Concept, Context) eligibility criteria detailing excluded studies and reasons for exclusion.
- Supplementary File 3: Scoping Review Evidence Database and Methodological Logs, comprising:
  - Sheet 1 (Summary Matrix): Categorization and evidence synthesis matrix of railway suspension technologies.
  - Sheet 2 (Extracted Studies): Full extraction database of the 30 included articles (evidence level tiers, methods, comfort standards, and outcomes).
  - Sheet 3 (Validation & Checks): Automated data integrity checks and evidence tier distribution analysis.
  - Sheet 4 (Unretrieved Reports): Bibliographic list of the 76 unretrieved reports with reason logs.
  - Sheet 5 (Search Log): Exact electronic database search strategy and query strings (Scopus).
  - Sheet 6 (Data Charting Form and Codebook): Variable extraction definitions and data charting form.
  - Underlying Datasets: Numerical data underlying Figures 2 and 3.

Paper submitted: 21.06.2026.
Paper accepted: 26.10.2026.
This is an open access article distributed under the CC BY 4.0 terms and conditions